© Siemens AG 2007

Resistance thermometers

Flange-type resistance thermometer with reduced response time, with connection head

Overview

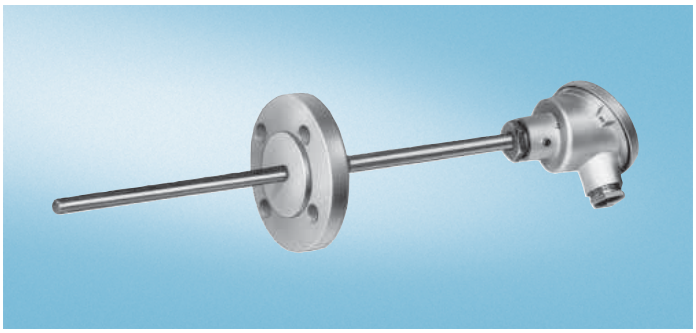

The flange-type resistance thermometer with connection head with reduced response time can be installed in tanks and pipelines; it is suitable for a temperature range from -50 to +600 °C (-58 to +1112 °F). The sensor is also available with a built-in temperature transmitter.

Technical specifications

Protective tube	
• Form	3, DIN 43772; cylindrical, 12 mm (0.47 inch) diameter, wall thickness 2.5 mm (0.1 inch), tapered towards tip; tip cylindrical over length of 47 mm (1.85 inch), 9 mm (0.35 inch) diameter, wall thickness 1.5 mm (0.06 inch)
• Material	X 6 CrNiMoTi 17 122, mat. No. 1.4571
• Loading capacity	to 40 bar (580 psi) (loading capacity dependent on material, temperature, flow rate, mounting length etc., see DIN 43772 for details)
Flange	Nominal diameter DN 25, nominal pressure PN 40 (ASME on request)
Measuring insert	Replaceable, with measuring insert tube (6 mm diameter (0.24 inch) made of stainless steel; terminal block with clamping springs
Response times (to VDI/VDE 3 522)	
• In water with flow velocity v = 0.4 m/s (1.31 ft/s)	$t_{0.5}$ = 22 s, $t_{0.9}$ = 66 s
• In air with flow velocity v = 1 m/s (3.28 ft/s)	$t_{0.5}$ = 2.1 min, $t_{0.9}$ = 6.5 min
Explosion protection	II 1/2G EEx ia IIC T4/T6

Dimensional drawings

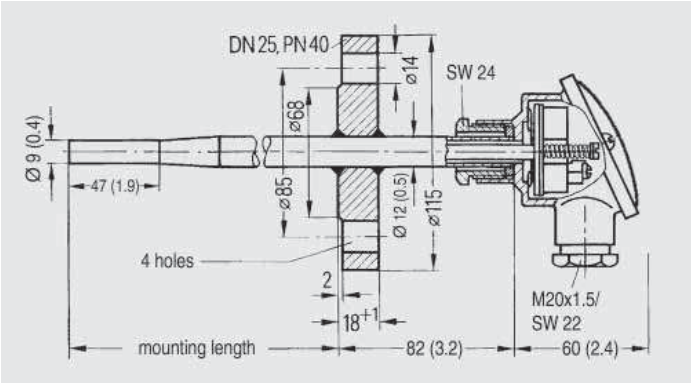

Flange-type resistance thermometer with reduced response time; with connection head, dimensions in mm (inches)

Selection and Ordering data		Order No.
Flange-type resistance thermometer with reduced response time with connection head		
Protective tube to DIN 43772, form: 3 one Pt100 measuring resistor: three-wire circuit, two Pt100 measuring resistors: two-wire circuit		
Measuring insert not explosion protected		
One Pt100 measuring resistor		
Mounting length/ mm (inch):	Weight/ kg (lb):	
• 225 (8.9)	1.5 (3.31)	7MC1041-1AA0
• 285 (11.2)	1.5 (3.31)	7MC1041-2AA0
• 345 (13.6)	1.5 (3.31)	7MC1041-3AA0
Two Pt100 measuring resistors		
Mounting length/ mm (inch):	Weight/ kg (lb):	
• 225 (8.9)	1.6 (3.53)	7MC1041-1AB0
• 285 (11.2)	1.6 (3.53)	7MC1041-2AB0
• 345 (13.6)	1.6 (3.53)	7MC1041-3AB0
Measuring insert with explosion protection		
One Pt100 measuring resistor		
Mounting length/ mm (inch):	Weight/ kg (lb):	
• 225 (8.9)	1.5 (3.31)	7MC1041-1EA0
• 285 (11.2)	1.5 (3.31)	7MC1041-2EA0
• 345 (13.6)	1.5 (3.31)	7MC1041-3EA0
Two Pt100 measuring resistors		
Mounting length/ mm (inch):	Weight/ kg (lb):	
• 225 (8.9)	1.6 (3.53)	7MC1041-1EB0
• 285 (11.2)	1.6 (3.53)	7MC1041-2EB0
• 345 (13.6)	1.6 (3.53)	7MC1041-3EB0
Connection head, form B		
• made of cast light alloy, with 1 cable inlet and		
- screw cover		1
- standard hinged cover		4
- high hinged cover		6
• made of stainless steel, with 1 cable inlet and screw cover		7
Further designs		Order code
Please add "**-Z**" to Order No. and specify Order code(s) and plain text.		
• Different design (mounting length, protective tube material etc.), specify in plain text.		Y01
• TAG plate made of stainless steel specify TAG No. in plain text		Y15
• Calibration carried out at one point, specify desired temperature in plain text (order equivalent number of times for several calibration points).		Y33

To order a temperature transmitter installed in the connection head, see "Temperature transmitters for installation in the connection head" (page 3/64).

Individual parts: Measuring inserts and connection heads, see "Accessories".